IMMERGAS	SERIAL NUMBER START OF SERIES	22/02/05	EOLO STAR 23 KW EXPORT	99AE
	2763417	3.016170		

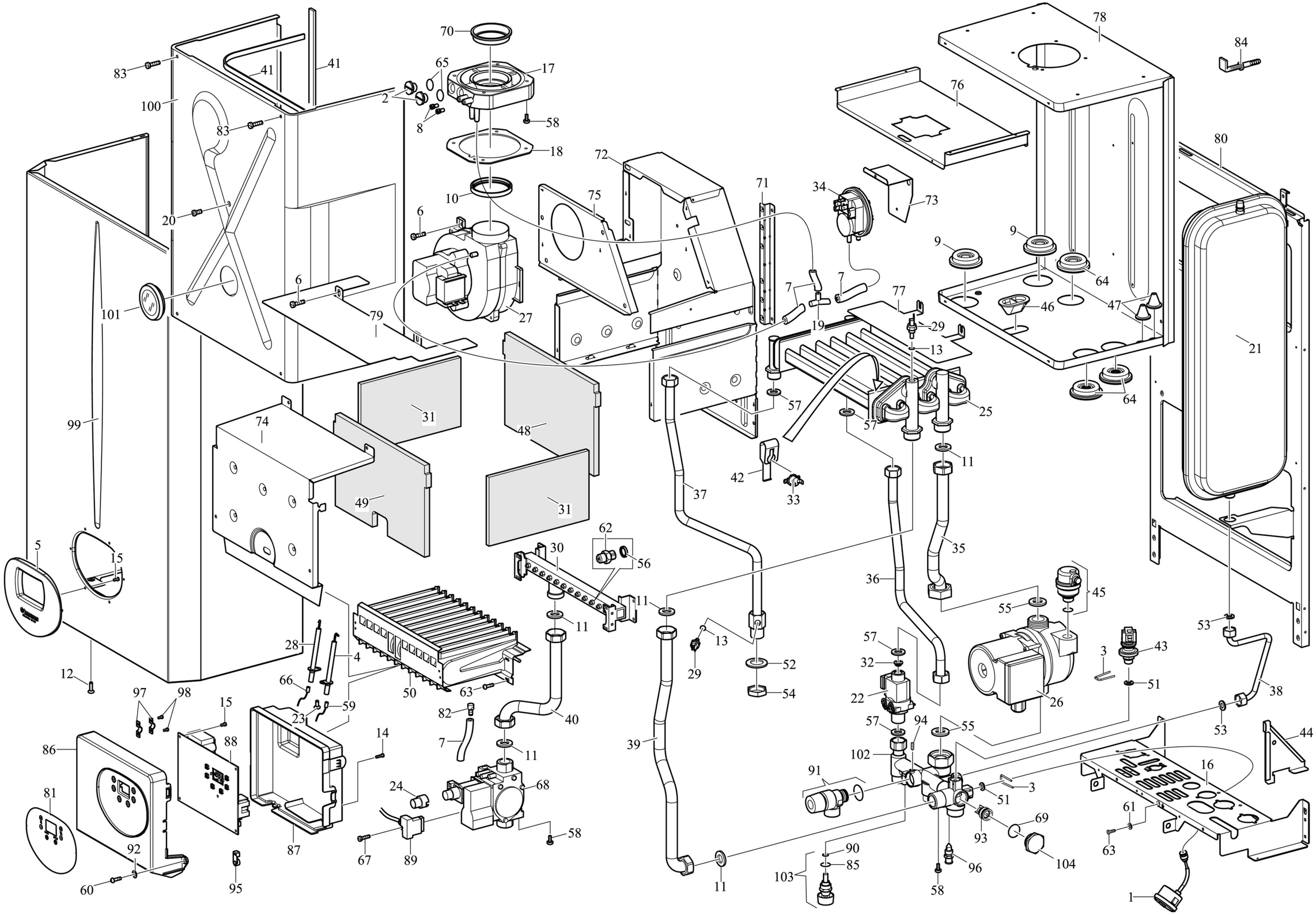

N°	CODE	DESCRIPTION	SERIAL NUMBER START OF SERIES
-	3.013494	G20 gas conversion kit	
-	3.013495	LPG gas conversion kit	
-	3.016543	Control panel - complete	
1	1.021908	Pressure gauge	
2	1.010430	Plug for pocket flange	
3	1.021519	Pressure switch locking clip	
4	1.010645	Ignitor sensor	
5	1.022199	Frontal frame	
6	1.0110	4.2x13 self-tapping screw, crosshead, flat point	
7	1.2363	4x8 silicone tube	
8	1.011057	Screw, pressure test point	
9	1.011362	D.12 pipe grommet in silicone	
10	1.020372	Seal, twin lip, d.60	
11	3.A0120	Set of 3/4" seals	
12	1.4066	3.5x9.5 self-tapping screw	
13	1.012711	Seal, self-centring	
14	1.1175	3.2x13 self-tapping screw, "Rapid fix"	
15	1.1656	3.5x6.4 self-tapping screw, crosshead, nickel-plated	
16	2.012544	Valve mounting plate	
17	1.013435	Pocket flange	
18	1.013436	Gasket, pocket flange	
19	1.014373	"Y" hose union	
20	1.0017	M6x12 screw, crosshead	
21	1.015138	6-litre expansion tank	
22	1.018914	Flowmeter	
23	1.0152	3.9x9.5 self-tapping screw, crosshead	
24	nfs	Gas valve cap	
25	1.015417	Bithermal heat exchanger 79 fins	
26	1.015561	Circulating pump 15-50	
27	1.018745	Fan	
28	1.015597	Ignitor	
29	1.021762	NTC fast immersion probe	
30	1.018434	G20 12 ramps gas manifold	
30	1.018435	LPG 12 ramps gas manifold	
31	1.016489	Ceramic fibre panel, side	
32	1.016594	9-litre flow limiter	
33	1.016870	105°C clicson thermostat	
34	1.016884	Air pressure switch with fixing screws	
35	1.016985	D.18 pipe, pump - exchanger	
36	1.021484	D.14 pipe, cold water inlet - exchanger	
37	1.021907	D.14 pipe,exchanger - hot outlet	
38	1.017581	D.8 pipe, delivery manifold - expansion tank	
39	1.016989	D.18 pipe, exchanger - delivery	
40	1.017152	D.18 pipe, gas valve - manifold	
41	1.013154	Adhesive foam strip, d.15x3	
42	1.017439	Clicson fixing clip	
43	1.016798	Absolute pressure switch	
44	2.012811	Bracket, control panel mount	
45	1.017563	Automatic vent valve	
46	1.019616	Grommet, silicone, d.3	
47	1.019750	Grommet, silicone, d.4	
48	1.017601	Ceramic fibre panel, rear	
49	1.017602	Ceramic fibre panel, front	
50	1.018433	Burner, 12 ramps	
51	1.017389	7.6x2.62 O-ring, epdm 70 sh	
52	1.0278	Seal, 28x21x2 in flexoid	
53	3.A1124	Set of 3/8" seals	
54	1.1269	1-2" F shallow brass nut	
55	3.A1343	Set of 1" seals	
56	nfs	Washer, gas nozzle	
57	3.A1363	Set of 1/2" seals	
58	1.2170	M4x8 screw, crosshead	
59	3.013213	Set of ignition electrode sensor	
60	1.2275	4.2x9.5 self-tapping screw, crosshead, flat point	
61	1.4246	M4 lock washer	
62	nfs	G20 gas nozzle, d.1.30	
62	nfs	LPG gas nozzle, d.0.77	
63	1.016246	M4x8 self-forming screw, crosshead	
64	1.6600	Grommet, silicone, d.16	
65	1.6922	10.77x2.62 O-ring, nitrile, 70 sh	
66	3.015165	Set of ignition electrode leads	
67	1.013186	M3.5x16 screw	
68	1.014365	Gas valve, SIT 845 with connections	
69	1.021490	16x2 O-ring, epdm 70 sh	
70	2.010352	Flue gas diaphragm, d.41,5	
70	2.011191	D.39 fume diaphragm	
71	2.010668	Support spacer, combustion chamber	
72	2.011200	Mounting wall, combustion chamber	
73	2.011601	Angle bracket, pressure switch	
74	2.012518	Front wall, combustion chamber	
75	2.011062	Front cover, flue outlet	
76	2.012344	Plate, air distribution	
77	2.011064	Deflector flue outlet	
78	2.012554	Back panel, sealed chamber	
79	2.011738	Combustion chamber deflector	
80	2.012543	Frame	
81	1.022205	Adhesive for display	
82	1.017228	Fitting, condensation tray	
83	1.5244	4.8x13 self-tapping screw, nickel-plated, cone point	
84	1.5899	Package of pair of plugs d.10x50	
85	1.017723	OR seal for cock	
86	1.021277	Bezel, control panel	
87	1.021278	Back cover, control panel	
88	1.021281	Ignition and adjustment card	
89	1.021820	Gas valve connector	
90	1.017724	OR seal domestic circuit - system	
91	1.016135	3-bar safety valve with O-ring	
92	1.8599	4.3x12 washer	
93	1.017198	By-pass valve, OV20	
94	nfs	M4x6 grub screw, cone point	
95	1.4072	Clip with clamp screw hole	
96	1.4275	Drain outlet with hose union	
97	1.7908	Steab cable clamp, black	
98	1.7967	3.5x19 self-tapping screw, crosshead	
99	3.016291	Casing framework assembly	
100	3.012848	Sealed chamber cover assembly	
101	3.012705	Inspection hole glass assembly with seal	
102	3.015895	Outlet and return manifold assembly	
103	1.021831	Filler valve - complete	
104	1.021479	Plastic plug	